Modulating Boll Buggy

Operation & Repair Parts

#04299400-2017

Table of Contents

Mechanical Operation Guide

Specifications. . . . . Below
Safety Decals. 1
Principle of Operation. 2
Preparing for Use. 2
Tractor Requirements. 2
Hitching to Tractor. 2
Drawbar Height Adjustment. 2
Drive line Attachment. 2
SCV Hydraulic Outlets. 2-3
In Cab Display. 3
Trailer and Light Plug. 3
Hydraulic System
PTO Pump. 3
Bridge and Tamper. 4
In Case of Fire. 4
Field Operation. 5

Repair Parts

Floor 6-7
Chamber. 8-10
Rear Gate. 11
Basket 12-15
Bridge & Tamper. 16-17
Guards 17
Hydraulics
Tank. 18
Regen Valve. 18
2-Spool Valve. 19
Cooler. 19
Flow Divider. 20
Manifold. 20
Solenoid Valve. 20
Pump. 21
Cylinders. 22

Specifications

Height	16'-5"
Width	17'-10"
Weight	30,000 lbs.
Basket Capacity	1875 cu. ft.
Basket Width at top	16'-0"
Basket Length	17'-4"
Module Size	7'-4" wide x approx. 9'-6" high x 16'-0" long

Safety Decals

#00167700



#00180000



#611087



#04343000



#02741700



#608000

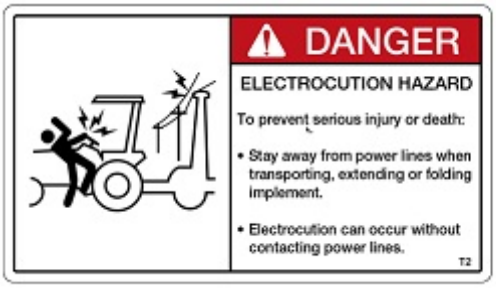

#608018



#608026



#04356200

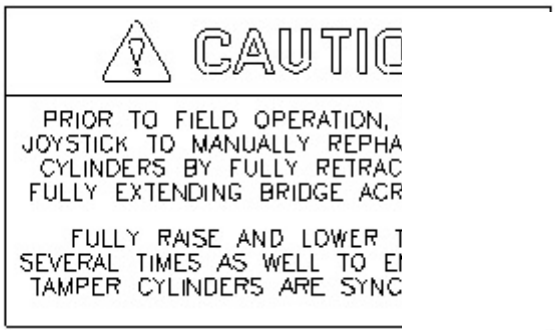

#607291



#04355400



Principle of Operation

1. The Modulating Boll Buggy is two machines in one. A receiving basket to act as a Boll Buggy and a packing chamber to function as a Module Builder. The receiving basket on the side of the Modulating Boll Buggy is built to service a cotton stripper similar to the way a Boll Buggy does.

2. The transfer of cotton from the stripper is aided by the extension of the basket side.

3. The cotton is transferred into the packing chamber by raising the basket and conveying with the chains and slats.

4. Then as the Modulating Boll Buggy travels through the field to the next stripper load, the auto tamp is engaged to compact the previous load in the compaction chamber.

5. After the packing chamber is full of cotton and it is sufficiently compacted, the load is ready to be transported to the edge of the field for storage.

6. To unload the compacted module, the rear gate is opened. The floor is lowered, the floor chain is engaged, and the Modulating Boll Buggy is driven forward.

Preparing for Use

Tractor Requirements:

1. A tractor of at least 175 horsepower equipped with MFWD is recommended.

2. Three SCV hydraulic outlets are required.

3. A 1 3/4"-20 splined 1000 RPM PTO shaft.

4. A 12 volt 3 prong in cab power outlet  (AMP style) and one red wire direct to positive on battery.

5. A 7 pin trailer outlet.

Contact your tractor dealer if your tractor is not sufficiently equipped to power the Modulating Boll Buggy.

Hitching to Tractor

Before connecting the Modulating Boll Buggy to tractor, adjust the tractor drawbar length so there is approximately 20" from the end of the PTO shaft to the center of the drawbar pin hole.

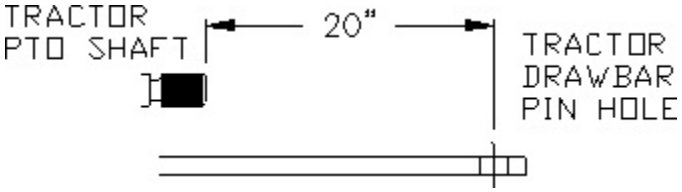

This will provide the Modulating Boll Buggy drive line with the best operating length.

Most tractor drawbars have several different pin holes in the front of the drawbar for adjustment. Consult tractor operating manual for specific instructions.

Drawbar Height Adjustment

Use any tractor drawbar offset and the swivel of the clevis on the Modulating Boll Buggy to adjust the bottom of the Modulating Boll Buggy as level as possible. A drawbar height of approximately 19" should provide a level Modulating Boll Buggy .

Use a drawbar pin of adequate size. (2" diameter is standard size for tractors of this category.) Make sure pin is secured with a lock nut or latch.

A safety chain is provided for secondary security. Attach safety chain hook to tractor drawbar frame as instructed in tractor operating manual.

Drive line Attachment

The Modulating Boll Buggy is equipped with a constant velocity PTO drive line. This drive line provides the best possible performance, but sharp turns should still be avoided to eliminate drive line vibration.

Clean and lightly lubricate the tractor PTO shaft and drive line yoke.

Unlatch the quick attachment yoke on the drive line and couple to the tractor PTO shaft. Make sure yoke is on the tractor PTO shaft far enough that the latching balls are engaged in the groove of the shaft.

> **Make sure ball valve on bottom of hydraulic oil tank is turned on. Pump damage will occur if operated without oil!**

SCV Hydraulic Outlets

Three pair of outlets are required. Each pair is connected to a solenoid operated selector valve. These valves shift the hydraulics from the loading of cotton into the basket and into the packing chamber to the unloading of the module from the packing chamber. The selector switch located on the joystick panel switches all three valves from the load to unload functions.

SCV outlets are connected as follows:

Preparing for Use -cont'd

SCV Hydraulic Outlets - con't

	Valves to **LOAD** Function	Vales switch to **UNLOAD** Function
1.	Basket Lift	Rear Gate
	Set hydraulic oil flow to high rate in order to raise basket quickly.	
2.	Basket Chain	Floor Chain
	Set hydraulic oil flow to a low rate so chain speeds are slow enough to be controllable.	
3.	Receiving Basket Clam	Floor Lift
	Set hydraulic oil flow to a low rate so receiving wall extends slowly.	

In Cab Display

The joystick control, auto tamp control, and video display needs to be mounted on the monitor rail inside tractor cab. Mount in a convenient location, but be careful not to mount where it obstructs tractor controls or outside visibility.

The in cab controls are powered by simply plugging 3 prong AMP plug into a convenient tractor plug and securing with coupling nut on plug. A 12 volt power wire is also connected directly to the tractor battery.

The video display is connected to the wiring harness by a black and gray 23 pin plug. These plugs are colored coded and must be attached to the appropriate colored socket. Route the wiring harness through back of tractor cab. Make sure harness will not be pinched or wrapped on PTO drive line during field operation and especially while turning. The operation of in cab controls will be discussed in the AT manual.

Trailer & Light Plug

The 7 pin light plug **MUST** be attached and operational. Road and field lights are powered through this plug. In addition, the hydraulic oil cooling fan is powered by this plug. Make sure the fan has 12 volt power or over heating of oil will occur. The cooling fan is thermostatically controlled and should not turn on until hydraulic oil exceeds 115° F. Clean cooling fan coils as required in order to keep the cooler operating efficiently.

Modulating Boll Buggy Hydraulic System

The cotton loading and module unloading functions are powered and controlled by the tractor hydraulics. The bridge and tamper functions are powered and controlled by the Modulating Boll Buggy's own PTO powered hydraulic system.

This system has approximately 110 gallon of oil. The oil reservoir is located in the front left corner of the Modulating Boll Buggy.

A sight gauge is provided to check oil level. Oil level should be checked daily. If oil needs to be added, use only **ISO 32 Universal Tractor Fluid.** Mixing oils could cause foaming and system damage. A vented filler cap is provided in the top of the reservoir. DO NOT over fill tank. Expansion from heat may cause tank to over flow.
A hydraulic oil filter is located in the top of the reservoir. The filter assembly is equipped with a filter condition indicator gauge. If this indicator shows "RED" when hydraulic oil is at operating temperature, the filters should be replaced. Filter cartridges are replaced by removing top of filter assembly and sliding cartridges out. Insert new cartridges, reinstall top of filter assembly, and check for leaks.

Also located in the reservoir is an oil temperature and level sensor. If the oil level gets below half full or exceeds 180°F, a visible and audible warning will be indicated on the in cab display. **If this occurs, immediately shut off tractor PTO.** Damage to the hydraulic system will occur if operation is continued. Remedy the problem before trying to continue operation.

An ON-OFF ball valve is located in the outlet hose of the hydraulic oil reservoir. This valve is a safety valve used if the hydraulic system is opened for service.

THIS VALVE MUST BE OPEN WHEN PTO PUMP IS ROTATING! PUMP DAMAGE WILL OCCUR IF OPERATED WITHOUT OIL!

PTO Pump

The pump should be driven within the 750 to 1000 PTO range. (Tractor engine RPM from approximately 1700 to wide open throttle.) Choose an engine RPM that provides sufficient power and torque to pull and power the Modulating Boll Buggy through the field.

The pump is internally lubricated and does not require any service. The PTO drive line and connecting shaft bearings should be greased weekly through the season.

Modulating Boll Buggy Hydraulic System

Bridge and Tamper
The hydraulic components, including the 2 spool directional valve, gear splitter, hydraulic cylinders are factory set and should not require any field adjustment, service, or lubrication.

The 2 spool directional valve is operated by electric coils. These coils are controlled by the in cab joysticks and the various tamping programs selected in the controller. These tamping programs are addressed in the Auto-Tamp manual.

The tamper hydraulic cylinders are synchronized to operate in unison by the oil flowing through the 4 way gear splitter mounted in the center of the bridge. The pressure relief cartridges let the four cylinders equalize pressure at the end of each stroke. These relief cartridges are factory set and should not be field adjusted. They protect the tamper cylinders from being over pressured. DO NOT ADJUST HYDRAULIC SYSTEM AS DAMAGE COULD OCCUR.

If air is somehow introduced into the hydraulic system the four tamper cylinders may get “out of time”. The only way to remedy this is to crack the hose fitting on the cylinders and bleed this air from the system.

The bridge hydraulic cylinders are synchronized the same as the tamper cylinders. They use a 2 way gear splitter mounted on the center of the left side of the Modulating Boll Buggy. This 2 way splitter is also equipped with pressure relief cartridges.

DO NOT ADJUST HYDRAULIC SYSTEM AS DAMAGE COULD OCCUR.

If the bridge cylinders become “out of time”, bleed the air from the lagging cylinder by cracking the hose fitting on the cylinder.

Do not let the bridge get very far “out of time”, or the ends of the bridge will become twisted. The bridge rolls back and forth on four roller. The bridge is held down by plastic lined clamps located on the inside of each end of the bridge. As these plastic strips wear, it may be necessary to remove a shim from behind the clamp. To remove a shim, loosen the bolts holding the clamp and slide the shim up and out. Re-tighten fasteners.

Plastic wear pads should not be tight against the frame, but should limit front to back movement of bridge to less than 1/4".

The 3 pivot pins of each scissor mechanism should be greased daily.

In Case of Fire

The bottom three panels on the receiving wall are doors that can quickly be opened in case of a cotton fire inside the receiving basket. A sliding bar with latches secure the doors shut. A T-handle to open the doors is located at the front bottom of the receiving wall. A safety pin keeps the bar from sliding. Remove this safety pin and pull T-handle to unlatch all three fire doors at once.

Most of the cotton will be dropped out of the basket if the receiving wall is extended and the basket is down.

Review this procedure before it is necessary to use it during a fire. Make sure all operators are familiar with fire procedures.

Field Operation

Standard operation with a 7460 John Deere Stripper*

Elapsed Time	Basket Dumps	Receiving Chamber	Compaction Chamber
5 min.	#1	Pull along stripper and take first dump (45 sec)	Nothing required - follow stripper for next load
10 min.	#2	Take next dump from stripper (45 sec) Follow stripper for next basket load.	Raise basket and place Auto Tamp (AT) in the "Basket Unload" function. Two basket loads are dumped with one raising of the receiving basket. Place AT to desired tamping program. Lower basket after all cotton is in compaction chamber. Continue to run AT in tamping program while following stripper for third basket load.
15 min.	#3	Take third dump from stripper (45 sec dump time) Follow stripper for next basket load.	Begin dumping cotton and switch AT to "Basket Unload" function while dumping the remainder of the third dump. Switch AT back to tamping program while following stripper for fourth basket load.
20 min.	#4	Take full dump from stripper and carry in basket while following the stripper for next basket load.	Continue to compact the third basket load using the "Topping Off" mode completing the module.
25 min.	#5	Take fifth load from stripper and carry it in the basket. Immediately head for the turn row to unload the completed module.	Packing can continue while moving toward the turn row until the module is tightly packed.
At the turn row (or module yard), position the Modulating Boll Buggy to unload. Change the switch on the controller from field operation to unload operation, open the gate, drop the floor to ground height, start the floor unload chains while slowly pulling forward. This will unload the finished module. Return back to the field while raising the receiving basket with dumps #4 and #5 still being carried in the basket. Unload both dumps into the compaction chamber by placing AT in "Basket Unload" function and then switch AT to the desired tamping mode.			
30 min.	#6	Take sixth dump from the stripper. This is the topping off dump for the next module. Follow stripper for next basket load.	Begin dumping cotton with AT in "Basket Unload" mode and then switch AT to the appropriate mode while dumping the remainder of the third dump. Change AT to "Topping Off" mode while following the stripper for the seventh basket load.
By now, one complete module of cotton has been made, and enough cotton has been received to build two complete modules. Continue the cycles as listed above to continue building cotton modules.			

*John Deere is a registered trademark of Deere & Company. The John Deere 7460 generally requires its basket to be dumped about every 5 minutes, assuming standard stripper conditions. Different field conditions, variation in the harvested cotton, and/or different operating procedures may yield different results than that illustrated above.

Floor

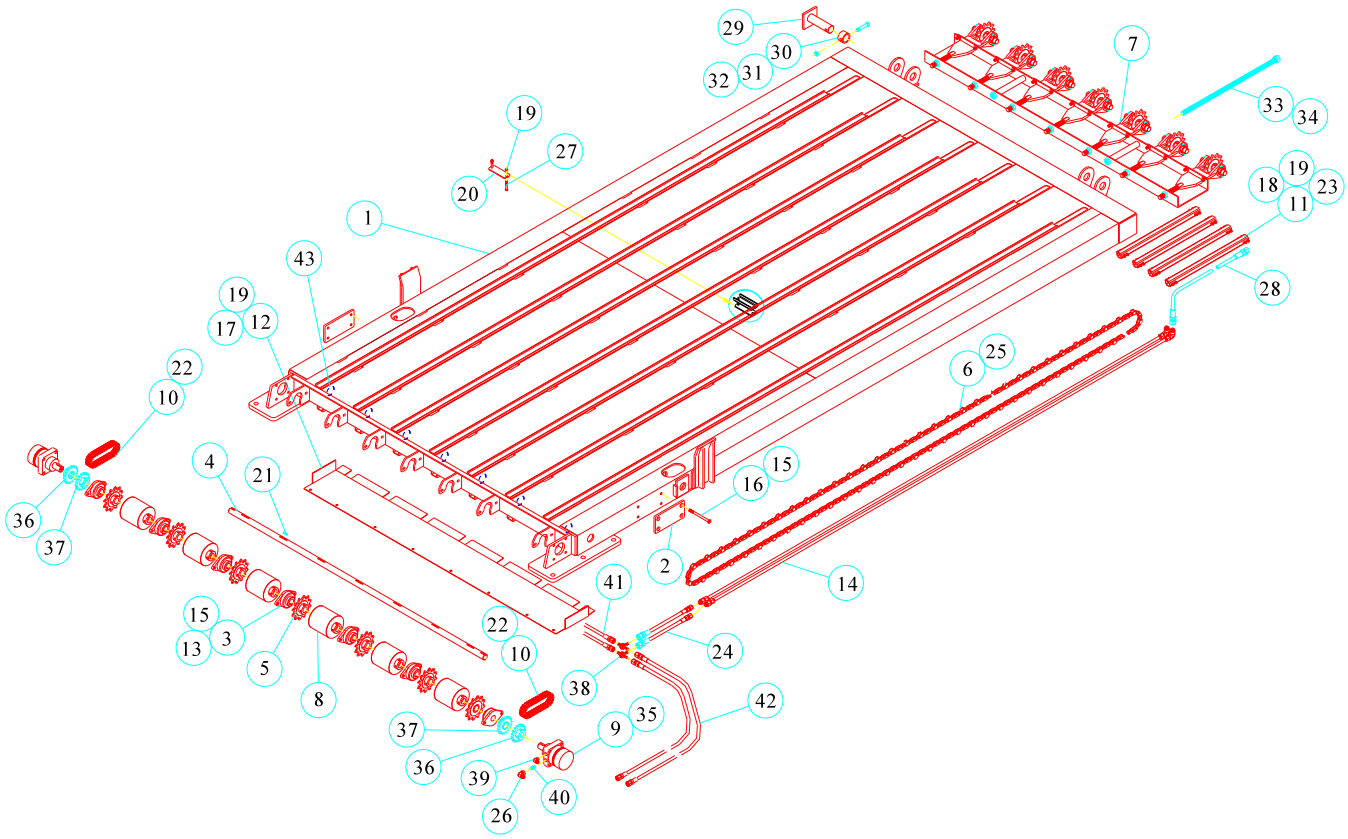

#63275200 - Floor Assembly

Item	Qty	Part No.	Description
1	1	83111500	Floor
2	2	30458400	Nylon Pad
3	7	12911400	Bearing 1½" -Tapped Collar
4	1	31749500	Roller Shaft
5	7	82819400	Sprocket C2062 & 1½" Hub
6		04101200	Chain C2062H x Feet (257P x 7)
7	1	63274500	Tensioner Assembly
8	6	83102400	Roller 6" x 8
9	2	04110300	Hydraulic Motor -Dynamic
10		04114500	Chain #60 Double x Feet (17P)
11	4	31197700	Tensioner Bracket
12	1	31743800	Sprocket Cover
13	14	333484	Carriage Bolt ½" x 1 3/4"
14	2	63127500	Hydraulic Line 5/8" x 176"
15	22	334110	Nylock Jam Nut ½'
16	8	04113700	Screw ½" x 7" Flat Socket
17	8	01017300	HHCS 3/8" x 1"
18	16	335729	HHCS 3/8" x 2½"
19	34	330837	Nylock 3/8"
20	5	217729	Clamp
21	9	19183300	Key 3/8" x 1½"
22	2	04200200	Chain #60D Connector
23	16	330894	Flat Washer 3/8"
24	2	475053	Hose ½" x 12" 7/8 JICF Swivel
25	5	04231700	Chain C2062H Connector
26	2	00530600	Adapter 90° 7/8 JICM-7/8 JICF Swivel
27	10	335877	HHCS 3/8" x 1 3/4"
28	2	02109700	Hose ½" x 54 7/8" 7/8 JICF Swivel
29	2	965749	Pin 2" x 7 1/8"
30	2	152967	Collar
31	2	01116300	HHCS 5/8" x 3½"
32	2	01572700	Nylock 5/8"
33	2	83020800	Bolt 1" x 33"
34	2	330381	Hex Nut 1"
35	8	334946	HHCS ½" x 3"
36	2	83105700	Sprocket & Hub #60 -18T w/1 1/4" Hub
37	2	83109900	Sprocket & Hub #60 -18T w/1 ½" Hub
38	2	00614800	Adapter Tee 7/8 JICM
39	2	03362100	Adapter Straight 7/8 MOR/7/8 JICM
40	2	474601	Adapter Straight 7/8 MOR/7/8 JICM
41	2	475061	Hose ½" x 77" -7/8 FJ Sw
42	2	475079	Hose ½" x 70" -7/8 FJ Sw
43	7	604587	Rubber Grommet 2 1/8 ID

Floor

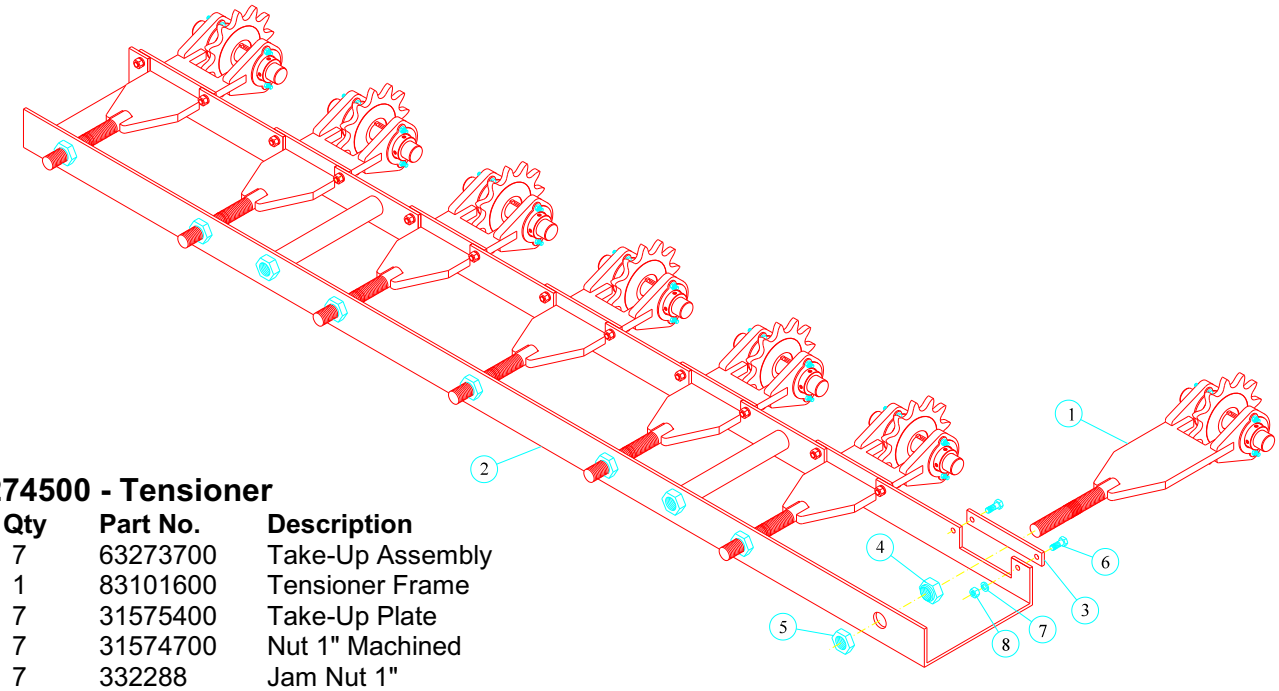

#63274500 - Tensioner

Item	Qty	Part No.	Description
1	7	63273700	Take-Up Assembly
2	1	83101600	Tensioner Frame
3	7	31575400	Take-Up Plate
4	7	31574700	Nut 1" Machined
5	7	332288	Jam Nut 1"
6	14	01017300	HHCS 3/8" x 1"
7	14	330043	Lock Washer 3/8"
8	14	330035	Hex Nut 3/8"

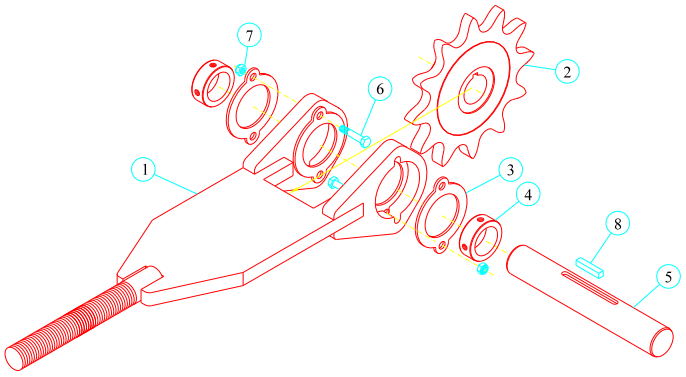

#63273700 - Tensioner Take-Up

Item	Qty	Part No.	Description
1	1	83095000	Take-Up
2	1	83097600	Sprocket & Hub C2062-12T-1 1/4" B
3	2	31569700	Bearing Plate
4	2	04300000	Bearing Insert
5	1	31572100	Shaft
6	4	333633	HHCS 1/4" x 1 1/4"
7	4	330522	Nylock 1/4"
8	1	10490100	Key 1/4" x 1 1/4"

Chamber

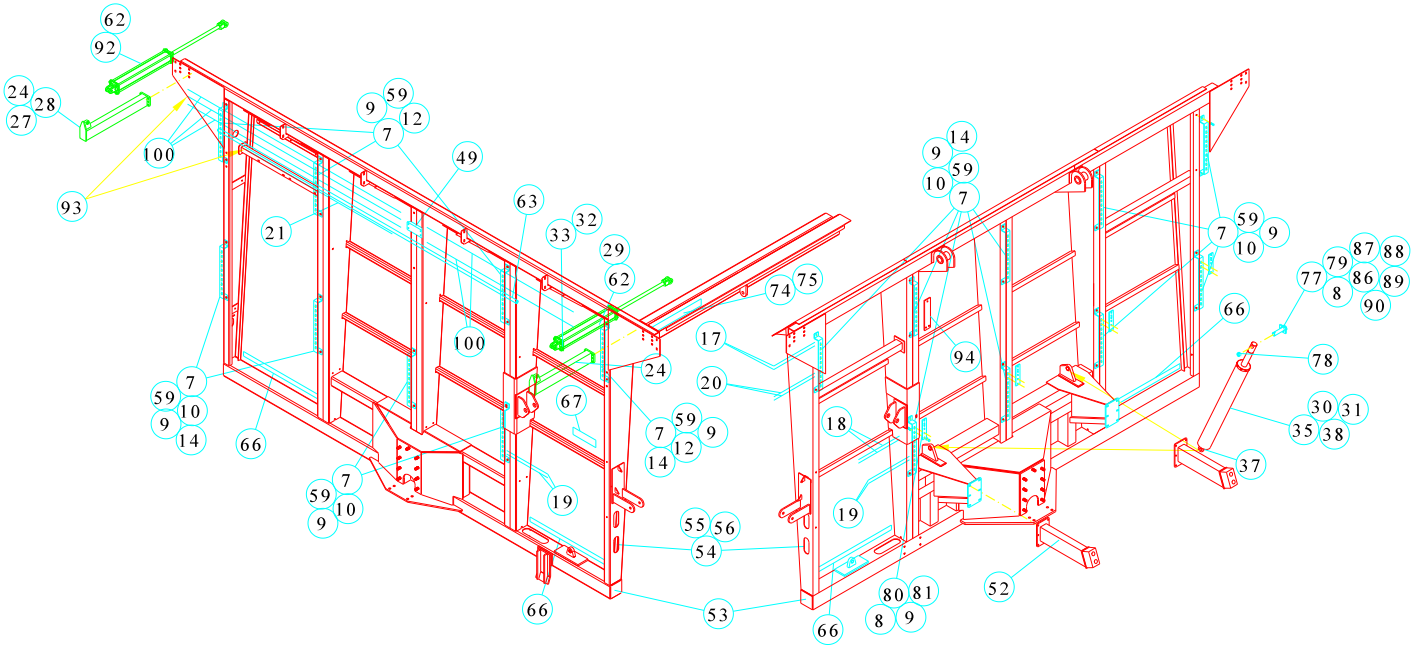

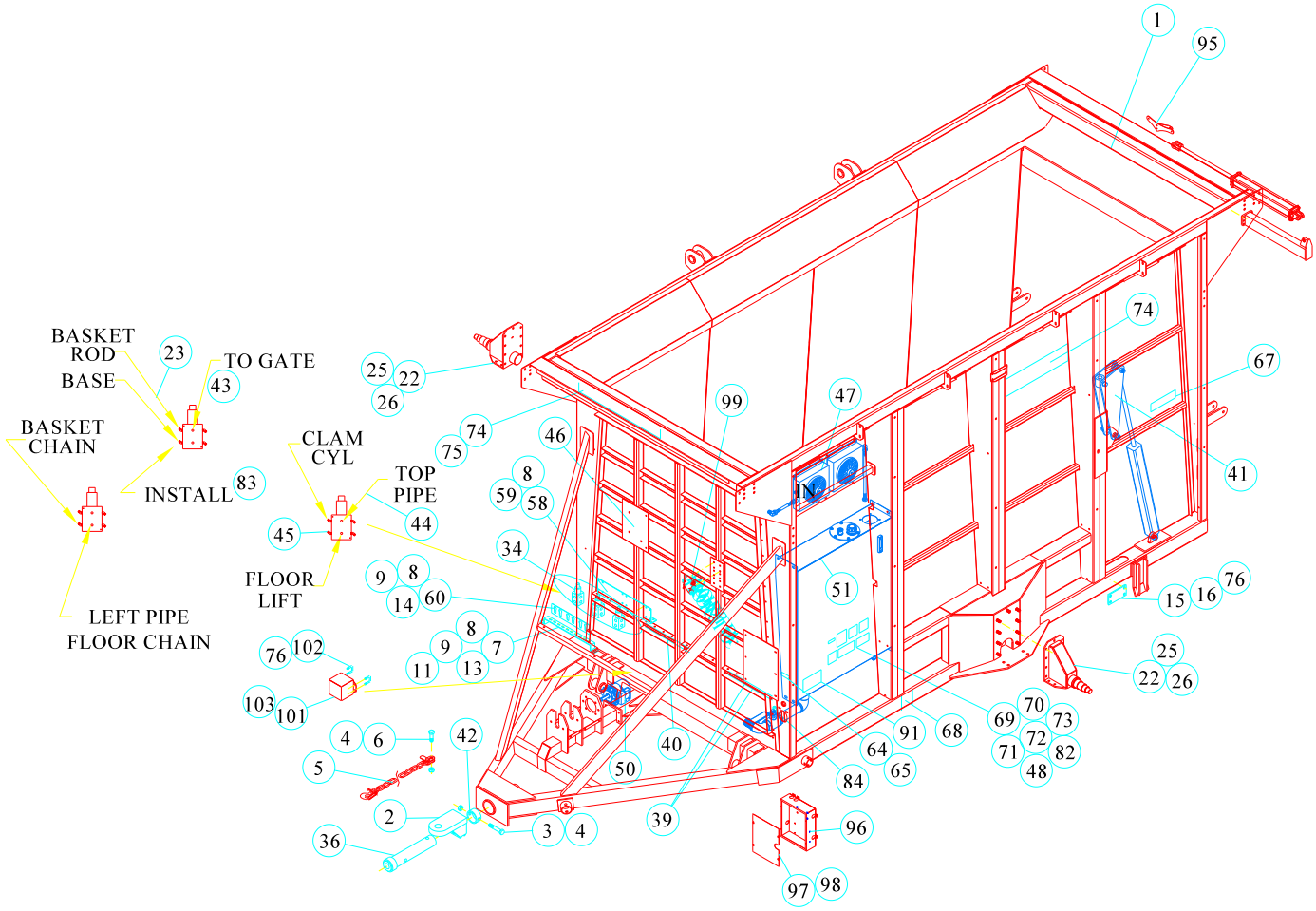
BASKET ROD
BASE
TO GATE
BASKET CHAIN
INSTALL
CLAM CYL
TOP PIPE
FLOOR LIFT
LEFT PIPE FLOOR CHAIN
IN

Chamber

#63336200 - Chamber Assembly

Item	Qty	Part No.	Description
1	1	83218800	Chamber
2	1	972430	Rotating Hitch
3	1	332817	HHCS 1" x 6½"
4	3	330597	Nylock 1"
5	1	433946	Safety Chain
6	1	334987	HHCS 1" x 3"
7	18	31311400	Hyd Line & Hose Bracket
8	14	330837	Nylock 3/8"
9	52	330894	Flat Washer 3/8"
10	18	00613000	Clamp 5/8"
11	3	00913400	Clamp 5/8" Double
12	20	02196400	U-Bolt 3/8" x 1" x 2"
13	2	330886	HHCS 3/8" x 3"
14	25	330654	Carriage Bolt 3/8" x 1"
15	2	30458400	Nylon Pad ½" x 5 x 10
16	8	335661	Screw ½" x 1½" Flat Head
17	2	63228100	Hyd Line 5/8" x 148"
18	2	63243000	Hyd Line 1" x 148"
19	4	63229900	Hyd Line 5/8" x 149"
20	2	63230700	Hyd Line 5/8" x 197"
21	1	63286900	Hyd Line 1" x 197"
22	2	63240600	Spindle & Hub Assembly
23	2	474536	Hose ½" x 60" 3/4 F Sw-1 1/16 F Sw
24	2	83274100	Cylinder Mount
25	8	335125	HHCS 3/4" x 2"
26	26	330316	Nylock 3/4"
27	12	02274900	HHCS 5/8" x 5"
28	12	01572700	Nylock 5/8"
29	1	475343	Cylinder 3½ x 55 Hi-Cycle
30	4	04206900	Adapter Straight 3/4 MOR-7/8 FJ Sw
31	4	04218400	Adapter 90° 7/8 MJ-1 1/16 MJ
32	2	00554600	Hose 3/4" x 60" 1 1/16 FJ Sw
33	2	00550400	Hose 3/4" x 48" 1 1/16 FJ Sw
34	3	63224000	Solenoid Valve Assembly
35	2	472613	Cylinder 5 x 43½
36	1	973131	Rotating Hitch Sleeve
37	2	63244800	Hose ½" x 24" 1 1/16 FJ Sw
38	2	63245500	Hose ½" x 42" 3/4 F Sw-1 1/16 FJ Sw
39	4	474619	Hose ½" x 50" 7/8 FJ Sw
40	2	00614800	Adapter Tee 7/8 JICM
41	2	63092100	Floor Tilt Assembly
42	1	155168	Bolt On Hitch Sleeve
43	2	468660	Hose ½" x 108" -7/8" FJ Sw
44	2	63234900	Hose ½" x 36" 7/8 FJ Sw
45	2	473983	Hose ½" x 96" 7/8 FJ Sw
46	1	63216600	2-Section Valve Assembly
47	1	63299200	Cooler Assembly
48	1	04343000	Decal-Danger PTO 1000 RPM
49	1	63223200	Manifold Assembly
50	1	63318000	Pump Assembly
51	1	63236400	Tank Assembly
52	2	63337000	Basket Support Assembly
53	60'	609917	Cable
54	4	613810	Light Red LED w/Grommet
55	1	614958	Plug 7 Pole
56	12	00680900	Butt Connector 16-14ga
57	20'	603001	Hose Wrap
58	1	32092900	Solenoid Valve Mount
59	40	01017300	HHCS 3/8" x 1"
60	1	31343700	Hose Carrier
61	100ga	04248100	Universal Tractor Fluid
62	4	00607200	Adapter 90° 1 1/16JICM-1 1/16 MOR
63	1	32235400	Conduit 1" x 150"
64	1	00694000	Serial Plate
65	2	600577	Drive Screw #6 x 1/4 Round
66	3/32	03726700	Reflector Tape Red/White
67	2	00180000	Decal -Stand Clear Door
68	1	607291	Decal -Torque Wheel Nuts
69	1	611087	Decal -Moving Parts
70	1	608018	Decal -Hydraulic Fluid
71	1	02741700	Decal -Moving Parts Hazard
72	1	608000	Decal -Electrocution
73	1	608026	Decal -Warning
74	3	02004000	Decal -Logo CBI
75	2	03573300	Decal -Stripe Yellow/Orange
76	12	331363	Nylock ½"
77	2	968990	Pin 1 1/4" x 4 3/8"
78	2	153056	Collar
79	2	331884	HHCS 3/8" x 2½"
80	4	31482300	Hose Bracket Extender
81	8	01158500	HHCS 3/8" x 1 1/4"
82	1	603159	Decal -Patent Pending
83	2	03358900	Adapter 45° 7/8MOR-1 1/16 MJ
84	1	02095800	Grommet 1 5/16
85	1	473694	Check Valve-3/4-16 SAE
86	2	474429	Hyd Counterbalance Valve
87	2	00893800	Adapter Straight 3/4MOR-3/4MOR
88	6	465294	Adapter Straight 3/4MOR-3/4 JICM
89	6	474130	Adapter 90° 3/4JICM-3/4 FJ Sw
90	2	470070	Hose ½" x 48" -3/4 FJ Sw
91	1	04356200	Decal Rephase Bridge Cylinders
92	1	475350	Cylinder 4 x 55 Hi-Cycle w/sensor
93	2	475129	Hose 1" x 46" -1 1/16 FJ Sw
94	1	31499700	Pipe Bracket
95	1	82774100	Prox Mount
96	1	976068	Wire Box
97	1	31497100	Wire Box Cover
98	4	337881	Screw #10-16 x ½" Flange
99	1	60731700	Cross Port Relief Valve
100	5	63285100	Hyd Line 1" x 92"
101	1	980755	Weather Box
102	2	331124	U-bolt ½" x 2" x 3"
103	1	04355400	Decal Store Joystick

Chamber

#63092100 - Floor Tilt Assembly

Item	Qty	Part No.	Description
1	1	82879800	Floor Lift Down
2	1	82878000	Floor Lift Up
3	1	550665	Trunion 1½"
4	4	602003	Bushing 1 1/4 x 1½ x ½
5	1	330357	HHCS 1" x 5½"
6	2	330407	Flat Washer 1"
7	3	330597	Nylock 1"
8	1	82877200	Rod
9	2	331074	Jam Nut 1½"
10	1	04222600	Cylinder 3 x 34
11	2	465310	Adapter 90° -3/4 MOR-3/4 JICM
12	1	470971	Hose ½" x 30" -7/8 FJ Sw-3/4 FJ Sw
13	1	474635	Hose ½" x 36" -7/8 FJ Sw-3/4 FJ Sw
14	1	82881400	Pin
15	1	152967	Collar 2"
16	1	01116300	HHCS 5/8" x 3½"
17	1	01572700	Nylock 5/8"
18	2	151787	Collar 2" -5/8" bolt

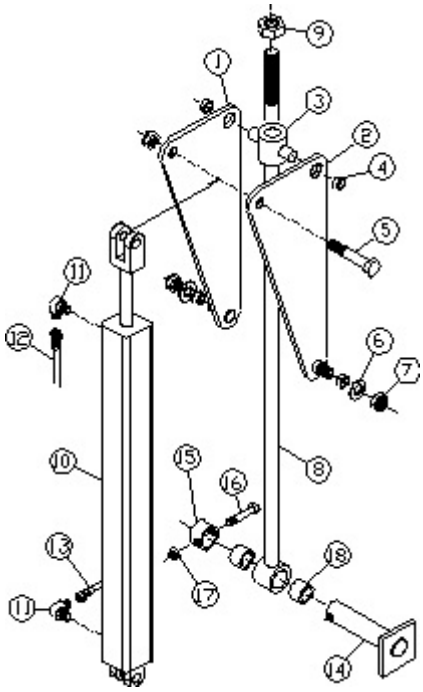

#63337000 - Basket Support Assembly

Item	Qty	Part No.	Description
1	1	83220400	Basket Support
2	1	00188300	Bumper 3½" x 3½" x 6 1/4"
3	2	334946	HHCS ½" x 3"
4	2	330159	Flat Washer ½"
5	6	01017300	HHCS 3/8" x 1"
6	6	330837	Nylock 3/8"

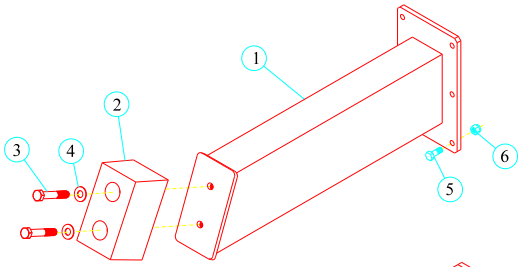

#63240600 - Spindle & Hub Assembly

Item	Qty	Part No.	Description
1	1	83029900	Spindle
2	1	403477	Hub 881- 10B Complete

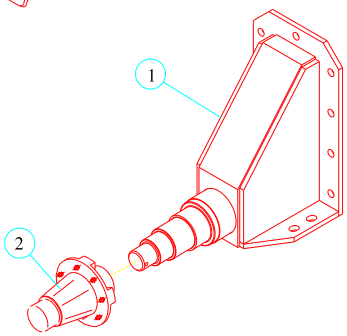

#403477 - W881 Hub Components

Item	Part No.	Description
1	403659	Hub w/Cups Only
2	403626	Spindle Washer
3	403634	Spindle Nut
4	403642	Cotter Pin
5	403618	Grease Seal
6	403584	Inner Bearing
7	403550	Inner Cup
8	403568	Outer Cup
9	403592	Outer Bearing
10	403600	Hub Cap
11	331546	Bolt 5/16 x ½
12	403352	Lug Nut
13	337899	Stud

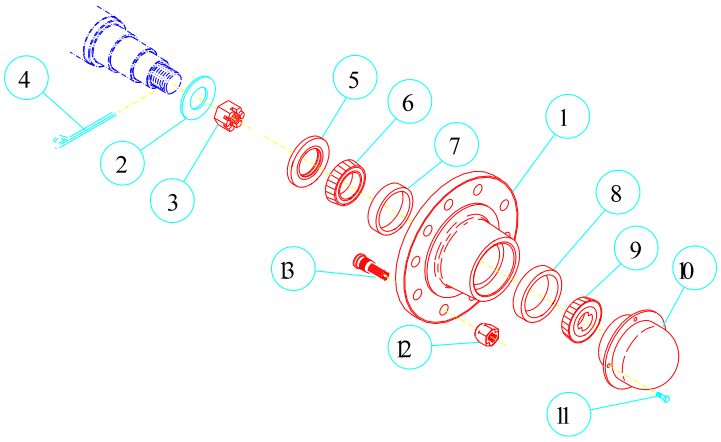

Rear Gate

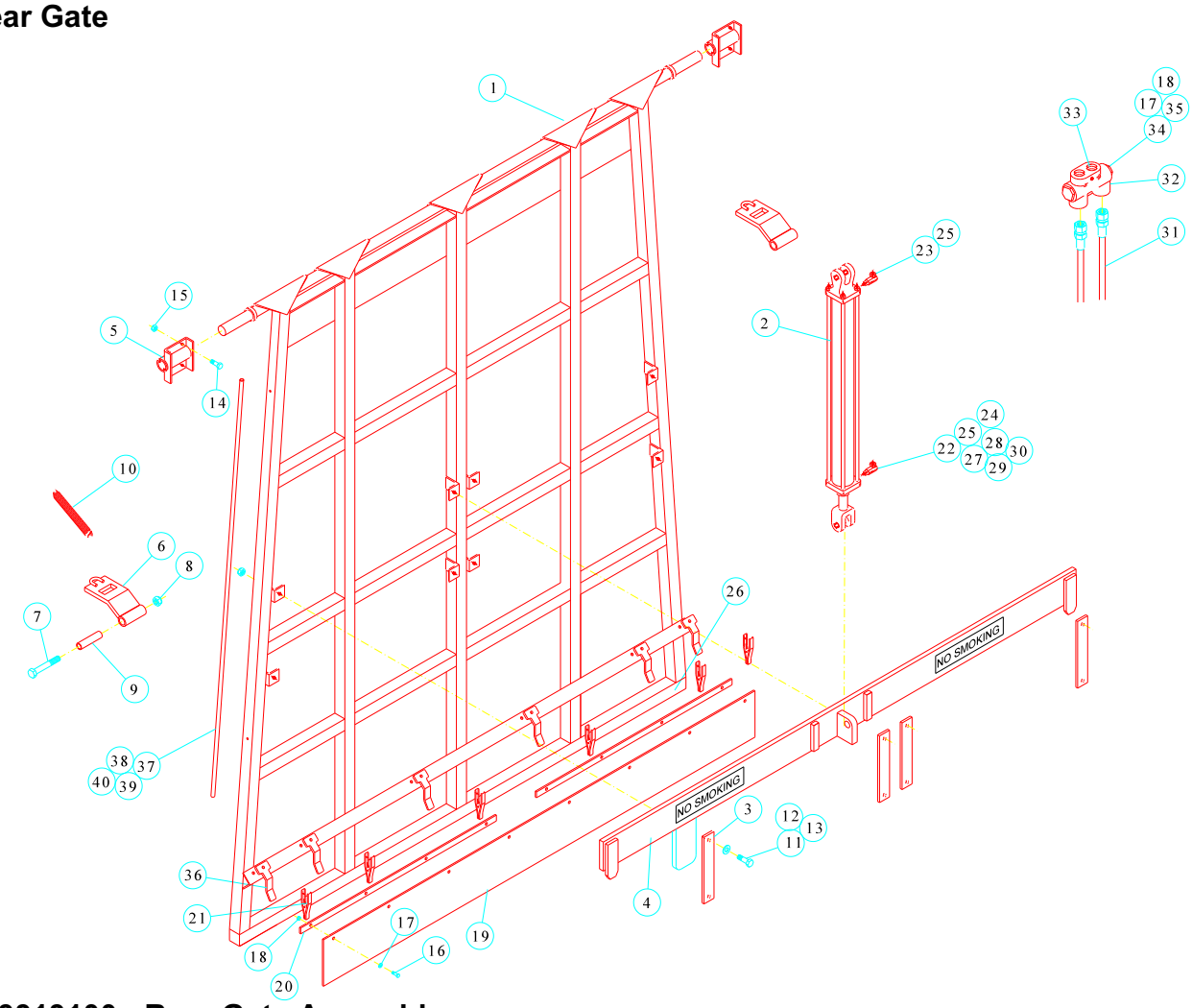

#63313100 - Rear Gate Assembly

Item	Qty	Part No.	Description
1	1	83021600	Rear Gate
2	1	475327	Cylinder 3½ x 30 -1 3/4 Ram
3	4	12792800	Gate Latch Retainer Strap
4	1	82560400	Gate Latch Bar
5	2	80115900	Gate Hinge
6	2	82559600	Latch Pin Right
7	2	334284	HHCS 3/4" x 6½"
8	2	330316	Nylock 3/4"
9	2	20663100	Bushing 3/4" x 4 1/8"
10	2	00687400	Spring
11	8	01071000	HHCS 5/8" x 2"
12	8	330183	Flat Washer 5/8"
13	8	01572700	Nylock 5/8"
14	8	01147800	HHCS 1/5" x 1½"
15	8	331363	Nylock ½"
16	14	01010800	HHCS 5/16" x 1"
17	16	330852	Flat Washer 5/16"
18	16	331611	Nylock 5/16"
19	1	12794400	Rubber Seal
20	2	12793600	Back Up Strap
21	6	03445400	Clamp Spring 6"
22	1	466862	Adapter 90° Restricted 3/4 MOR-3/4 JICM
23	1	465310	Adapter 90° -3/4MOR-3/4 JICM
24	1	465153	Hose ½" x 36" 3/4 FJ Sw-3/4 FJ Sw
25	2	63232300	Hose ½" x 113" 3/4 FJ Sw-7/8 FJ Sw
26	7.5'	03726700	Reflector Tape Red/White
27	1	474429	Counterbalance Valve
28	1	00893800	Adapter Straight 3/4MOR-3/4MOR
29	3	465294	Adapter Straight 3/4MOR-3/4JICM
30	2	474130	Adapter 90° 3/4JM-3/4FJ Sw
31	2	473884	Hose ½" x 18" -7/8FJSw
32	1	465104	Lock Valve
33	4	00978700	Adapter 45 3/4MOR-7/8JM
34	1	335448	HHCS 5/16" x 1½"
35	1	02440600	HHCS 5/16" x 1½"
36	6	31967300	Clamp Back Plate
37	1	32243800	Conduit ½" x 72"
38	2	00613000	Hose Clamp 5/8"
39	2	01017300	HHCS .375" x 1"
40	2	330035	Hex Nut 3/8"

Basket

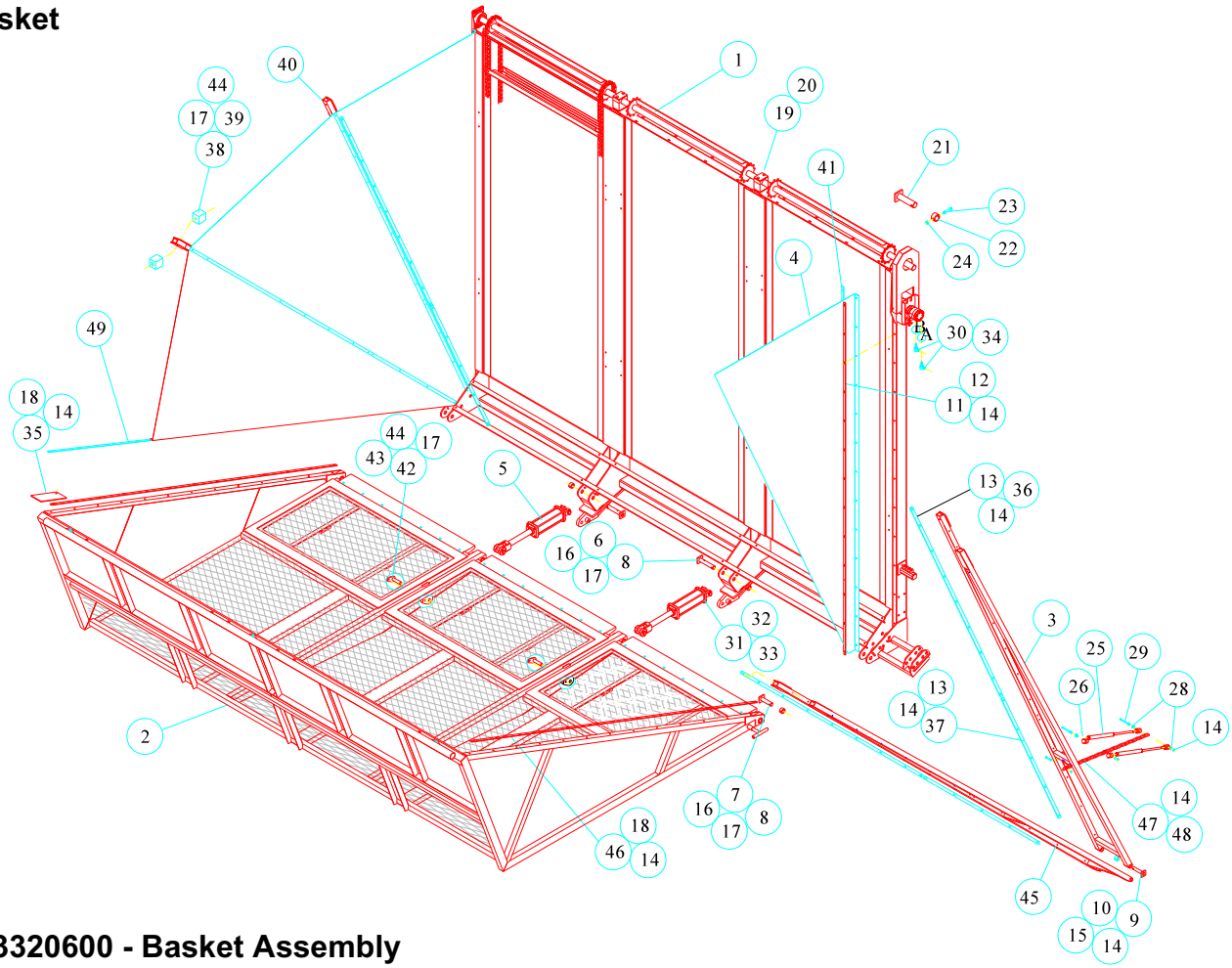

#63320600 - Basket Assembly

Item	Qty	Part No.	Description	Item	Qty	Part No.	Description
1	1	63319800	Unload Side	28	50	330894	Flat Washer 3/8"
2	1	63191100	Basket Door	29	4	01573500	HHCS 3/8" x 4½" Stainless
3	1	83254300	Support Tube Front	30	2	00542100	Adapter 45° 7/8MOR-7/8JICM
4	2	04344800	Poly Side				
5	2	475384	Cylinder 4 x 12	31	2	475004	Hose ½" x 192" 3/4FJ Sw-7/8FJ Sw
6	2	82967100	Pin 1 1/4 x 6 5/16				
7	2	82968900	Outer Pin 1 1/4 x 4 5/16	32	2	474999	Hose ½" x 198" 3/4FJ Sw-7/8FJ Sw
8	4	31126600	Collar 1 1/4" x 1				
9	8	82970500	Arm Pin 1 x 4 5/16	33	4	466862	Adapter 90° Restricted 3/4MOR-3/4JICM
10	8	31127400	Collar 1" x 1				
11	2	82961400	Poly Side Plate	34	2	02122000	Hose ½" x 120" (To Motor) 7/8 FJ Sw
12	26	01017300	HHCS 3/8" x 1'				
13	68	339416	HHCS 3/8" x 3 1/4"	35	2	31548100	Bumper Plate
14	142	330837	Nylock 3/8"	36	4	32224800	Poly Side Back Up -89"
15	8	334243	HHCS 3/8" x 2"	37	4	32225500	Poly Side Back Up -56½"
16	4	336644	HHCS ½" x 2 1/4"	38	4	10746600	Rubber Bumper
17	10	331363	Nylock ½"	39	4	334458	HHCS ½" x 6"
18	32	330886	HHCS 3/8" x 3"	40	1	83255000	Support Tube Rear
19	10	00913400	Clamp 5/8 Double	41	2	83239400	Poly Side Back up Strap
20	10	01200500	Screw 5/16 x 3/4 Self-Tap	42	4	83272500	Pin 1 x 3 3/4" 1 1/8" Spacer
21	2	82983800	Basket Pin 2 x 7 1/8	43	4	338442	HHCS ½" x 3½" Gr 8
22	2	152967	Lock Collar 2"	44	6	330159	Flat Washer ½"
23	2	01116300	HHCS 5/8" x 3½"	45	2	83256800	Support Tube
24	2	01572700	Nylock 5/8"	46	2	83257600	Poly Side Backup Rear 1/4"
25	4	04345500	Gas Spring	47	2	32238800	Chain 1/4 Proof x 23 Links
26	8	32220600	Gas Spring Adapter	48	2	331884	HHCS 3/8" x 2½"
27	2	331900	HHCS 3/8" x 4"	49	2	83275800	Poly Side Backup Rear 14ga

Basket

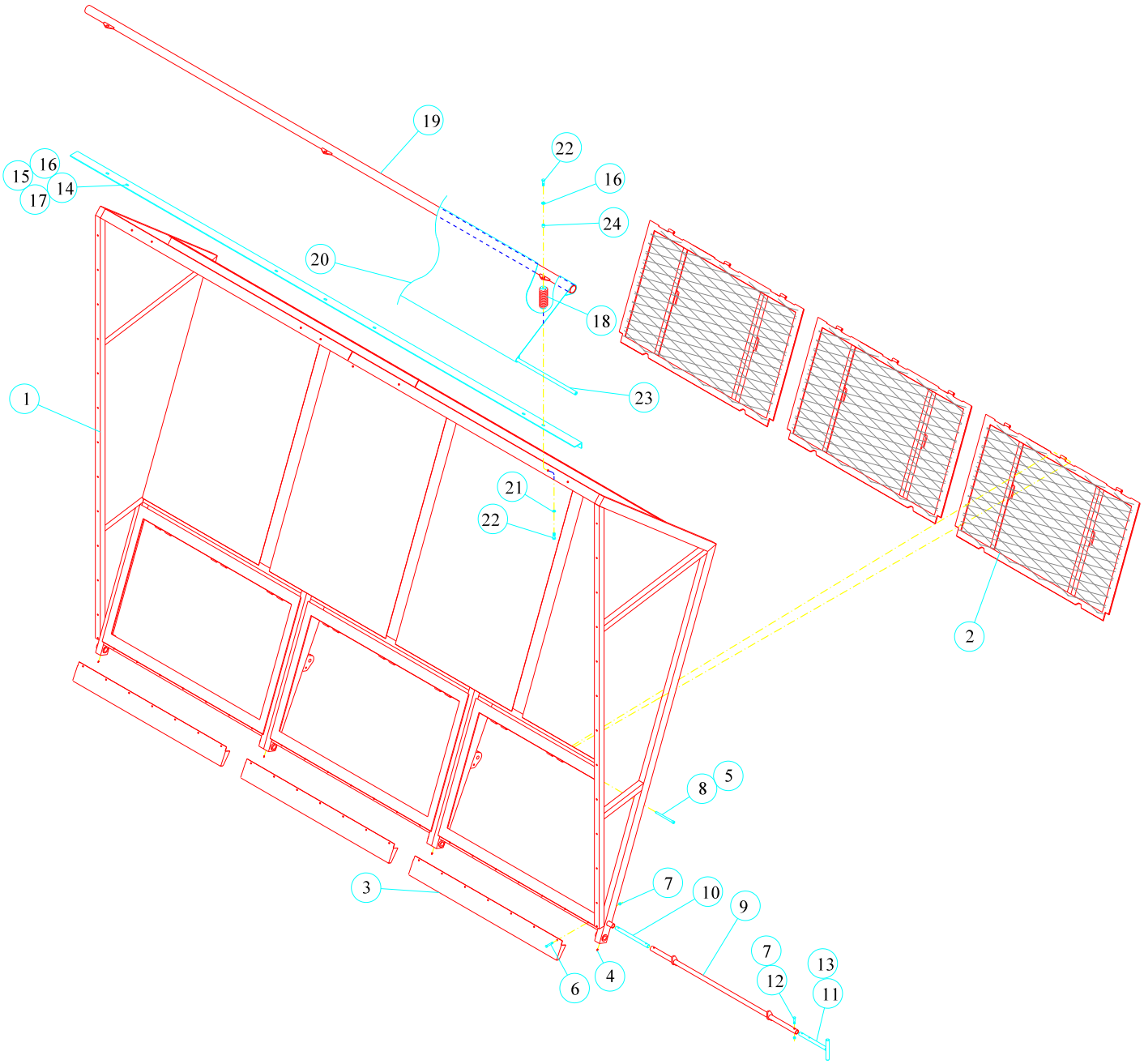

#63191100 - Basket Door Assembly

Item	Qty	Part No.	Description
1	1	82962200	Basket Door
2	3	82965500	Access Door
3	3	31113400	Bottom Cover
4	4	604660	Zerk 1/4-25 x 9/16 Self-Tap
5	9	955344	Door Hinge Pin
6	21	331884	HHCS 3/8" x 2½"
7	21	330837	Nylock 3/8"
8	9	330936	Cotter Pin 1/8 x 1
9	3	83043000	Latch Pipe
10	2	31381700	Latch Connecting Tube
11	2	83042200	Fire Door Handle
12	6	335877	HHCS 3/8" x 1 3/4"
13	1	00233700	Wire Lock Pin 5/16 x 2 3/4 Square
14	1	285593	Support Angle
15	4	01029800	HHCS ½" x 1"
16	7	330159	Flat Washer ½"
17	4	331363	Nylock ½"
18	3	83241000	Spring
19	1	83240200	Extension Tube
20	1	04326500	Extension Panel
21	3	330142	Lock Washer ½"
22	3	01147800	HHCS ½" x 1½"
23	1	32205700	Stay Tube
24	3	32192700	Bushing

Basket

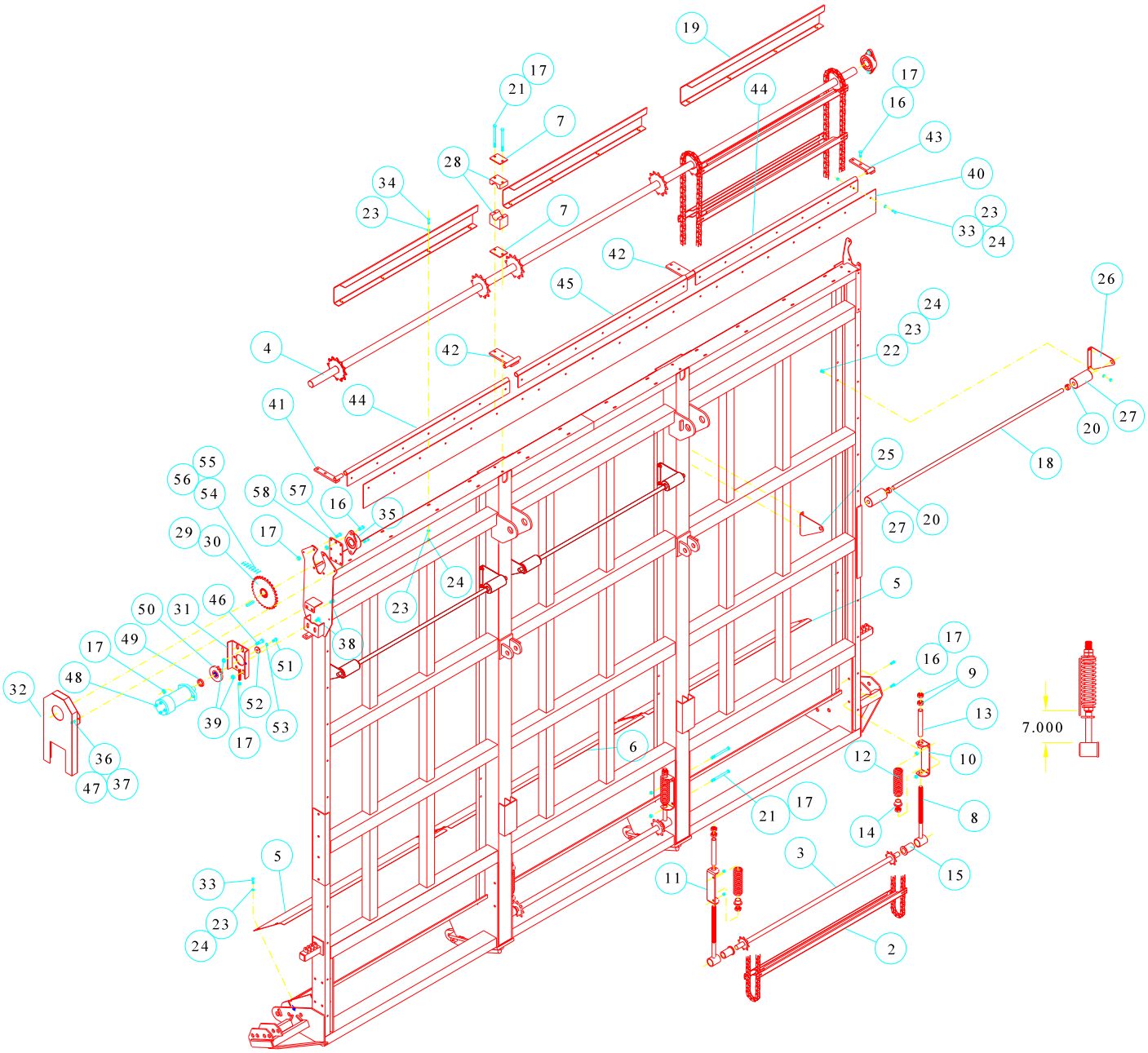
19
17
21
7
28
34
23
7
44
17
16
43
40
23
33
24
42
45
26
24
23
22
4
42
44
41
27
20
18
25
55
56
54
58
57
16
35
27
20
29
30
17
24
23
5
50
31
46
38
17
49
51
16
9
32
48
52
39
53
17
13
7.000
36
6
12
10
47
37
21
17
8
14
3
15
5
33
11
23
24
2

Basket

#63319800 - Unload Side Assembly

Item	Qty	Part No.	Description
1	1	83236000	Unload Panel
2	3	63241400	Chain Slat Assembly
3	3	83037200	Bottom Shaft
4	1	83038000	Top Shaft
5	2	31070600	Bottom Cover -Ends
6	1	31071400	Bottom Cover -Center
7	4	210906	Bearing Shim
8	6	635920	Chain Take-Up
9	12	332288	Jam Nut 1"
10	3	963231	Spring Tension Bracket-Front
11	3	963249	Spring Tension Bracket-Rear
12	6	502278	Spring
13	6	152157	Bushing
14	6	963223	Spring Retainer
15	6	402677	Nylon Bushing
16	12	01147800	HHCS ½" x 1½"
17	29	331363	Nylock ½"
18	6	30526800	Roller Shaft
19	3	30524300	Top Shaft Cover
20	24	06409700	Lock Collar 1"
21	8	335505	HHCS ½" x 7"
22	24	330654	Carriage Bolt 3/8" x 1"
23	81	330894	Flat Washer 3/8"
24	69	330837	Nylock 3/8"
25	6	264374	Roller Bracket -Front
26	6	264416	Roller Bracket -Rear
27	12	00190900	Plastic Roller 3"
28	2	402669	Nylon Bearing
29	1	13228200	Key ½" x 3"
30	1	433383	Sprocket #80-30T 2" Bore
31	1	964825	Motor Slide
32	1	83045500	Chain Guard
33	33	01017300	HHCS 3/8" x 1"
34	12	335703	HHCS 3/8" x 1½"
35	2	402685	Bearing 2"
36	4	01010800	HHCS 5/16" x 1"
37	4	330811	Hex Nut 5/16'
38	4	00665000	Carriage Bolt 5/8" x 1½"
39	4	01572700	Nylock 5/8"
40	1	31218100	Belt 8" x 199 3/4"
41	1	83026500	Belt Bracket -Front
42	2	83024000	Belt Bracket -Mid
43	1	83025700	Belt Bracket -Rear
44	2	82985300	Belt Hanger -Ends
45	1	82984600	Belt Hanger -Mid
46	2	335240	HHCS ½" x 1 3/4"
47	4	330845	Flat Washer 5/16"
48	1	472035	Motor
49	1	152454	Motor Spacer
50	1	82359100	Sprocket #80-13T 1 1/4"Bore
51	1	338038	HHCS 5/8" x 1" Fine Thread
52	1	330183	Flat Washer 5/8"
53	1	330878	Lock Washer 5/8"
54	1	15182900	Chain #80 x 57 Pitch
55	1	00232900	Chain #80 Connector
56	1	00265900	Chain #80 Offset
57	6	01029800	HHCS ½" x 1"
58	2	31963200	Bearing Plate

#63241400 - Chain Slat Assembly

Item	Qty	Part No.	Description
1	20	31361900	Chain Slat
2	2	432377	Chain CA550 x 208 Pitch
3	80	330548	Carriage Bolt 3/8" x 3/4"
4	80	336909	Nylock Jam Nut 3/8"

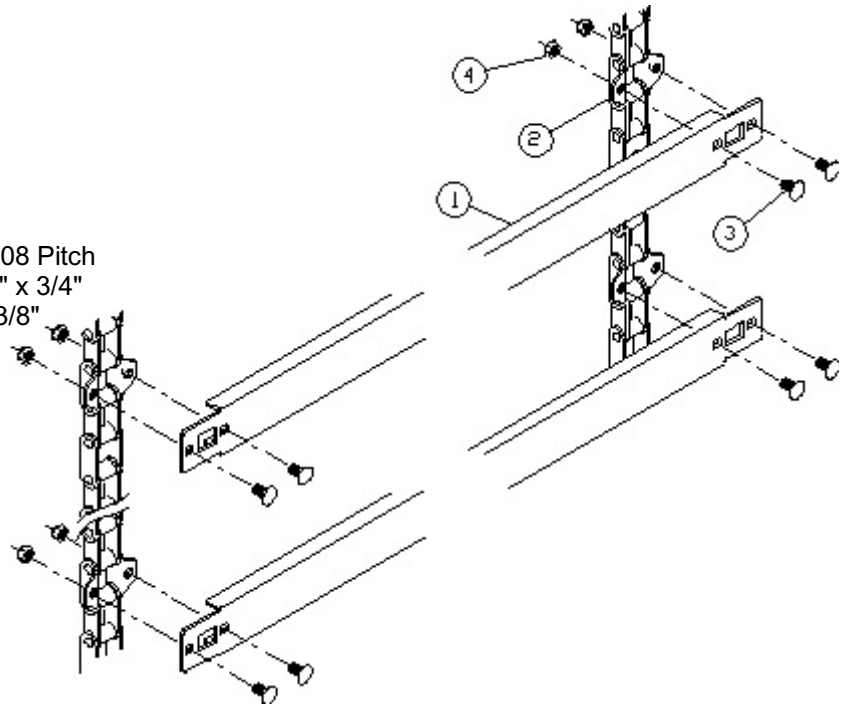

Bridge & Tamper

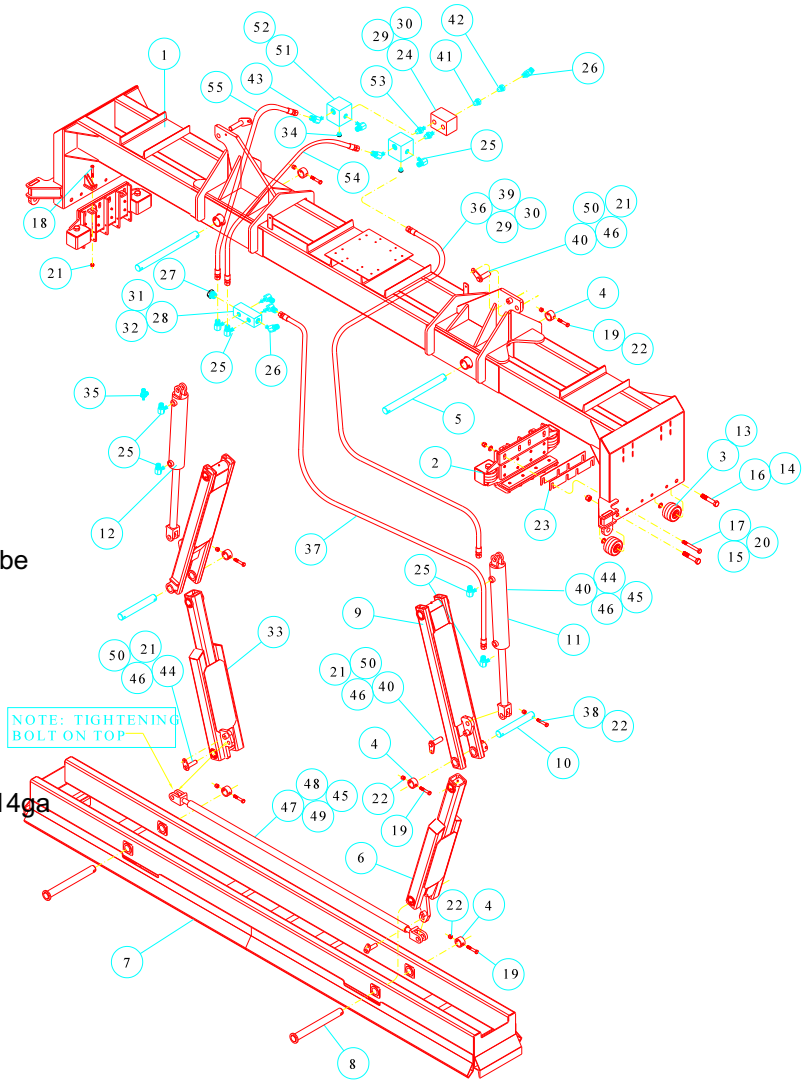

#63345300 - Bridge Assembly

Item	Qty	Part No.	Description
1	1	83232900	Bridge
2	2	63340400	Bridge Retainer
3	4	03823200	Roller 1" x 5" x 3 1/4"
4	6	152967	Lock Collar 2"
5	2	31801400	Bridge Pin
6	1	63334700	Lower Rear Scissor Tube
7	1	83237800	Tamper
8	2	83238600	Tamper Pin
9	2	63278600	Upper Scissor Tube
10	2	31799000	Tie Rod Pin
11	1	475368	Cylinder 4x20 Hi-Cycle W/Sensor
12	1	475376	Cylinder 4x20 Hi-Cyle
13	8	335026	Machine Bushing 1" x 14ga
14	4	330597	Nylock 1"
15	8	330316	Nylock 3/4"
16	4	330357	HHCS 1" x 5½"
17	8	331579	HHCS 3/4" x 7½"
18	4	334300	HHCS ½" x 3½"
19	10	01116300	HHCS 5/8" x 3½"
20	8	330340	Flat Washer 3/4"
21	10	331363	Nylock ½"
22	12	01572700	Nylock 5/8"
23	4	12729000	Retainer Shim 10ga
24	1	04314100	Flow Divider 2-Section
25	10	00607200	Adapter 90° 1 1/16 MOR-1 1/16 JICM
26	2	00651000	Adapter 45° 1 5/16 MOR -1 5/16 JICM
27	1	04219200	Adapter Plug 1 5/16 MOR
28	1	04217600	Manifold 180° Header
29	6	01017300	HHCS 3/8" x 1"
30	6	330837	Nylock 3/8"
31	2	02396000	HHCS 5/16" x 3½"
32	2	331611	Nylock 5/16"
33	1	63335400	Lower Front Scissor Tube
34	2	475442	Plug #4 Male Boss
35	2	03556800	AdapterTee 1 1/16"JM-2/1 1/16" Fsw
36	2	475277	Hose 3/4" x 70" -1 1/16 FJ Sw
37	2	00873000	Hose 3/4" x 90" -1 1/16 FJ Sw
38	2	331983	HHCS 5/8" x 4"
39	2	03463700	Hose Clamp 1 1/4"
40	4	83270900	Cylinder Pin 1 1/4" x 3 3/4"
41	1	04240800	Adapter Straight 1 7/8 MOR/1 5/8 FOR
42	1	04238200	Adapter Straight 1 5/8 MOR/1 5/16 FOR
43	2	00601500	Adapter 45° 1 1/16 MOR/1 1/16 JICM
44	2	83272500	Pin 1" x 3 3/4"
45	2	332569	Machine Bushing 10ga x 1 7/8 x 1 1/4
46	6	338442	HHCS ½" x 3½" Gr8
47	1	63332100	Clevis Rod Assembly
48	2	463133	Clevis Pin
49	2	460469	Cylinder Clip Pin
50	6	330159	Flat Washer ½"
51	2	04346300	Custom Relief Body
52	2	04347100	Valve Cartridge
53	2	04349700	O-ring Union 1 5/8 MOR
54	1	475426	Hose ½" x 20 -1 1/16FJSw
55	1	475434	Hose ½" x 25 -1 1/16 FJSw

Bridge & Tamper

#63340400 - Bridge Retainer Assembly

Item	Qty	Part No.	Description
1	1	83233700	Bridge Retainer
2	1	30404800	Nylon Pad 3/4 x 3 x 19½
3	1	32169500	Nylon Pad 3/4 x 5 x 19
4	12	337683	Screw 5/16 x 1 3/4 Flat Head
5	12	331611	Nylock 5/16
6	2	03823200	Wheel Assembly 5" W/Bearing & Bushing
7	2	332817	HHCS 1" x 6"
8	2	330597	Nylock 1"

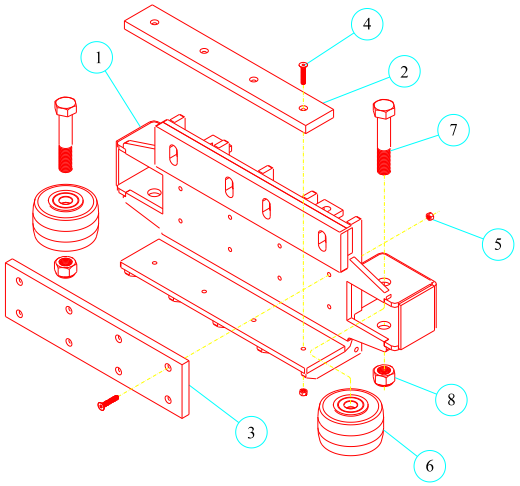

Guards

Item	Qty	Part No.	Description
1	1	83224600	Side Guard
2	2	82867300	End Guard
3	1	31338700	Attachment Plate
4	1	31331200	Attachment Plate
5	13	330886	HHCS 3/8" x 3"
6	24	330837	Nylock 3/8"
7	1	32244600	Basket Cover Plate Front
8	1	31786700	Basket Skirt Board
9	1	31490600	Back Up Strap
10	11	01017300	HHCS 3/8" x 1"
11	1	32245300	Basket Cover Plate Rear

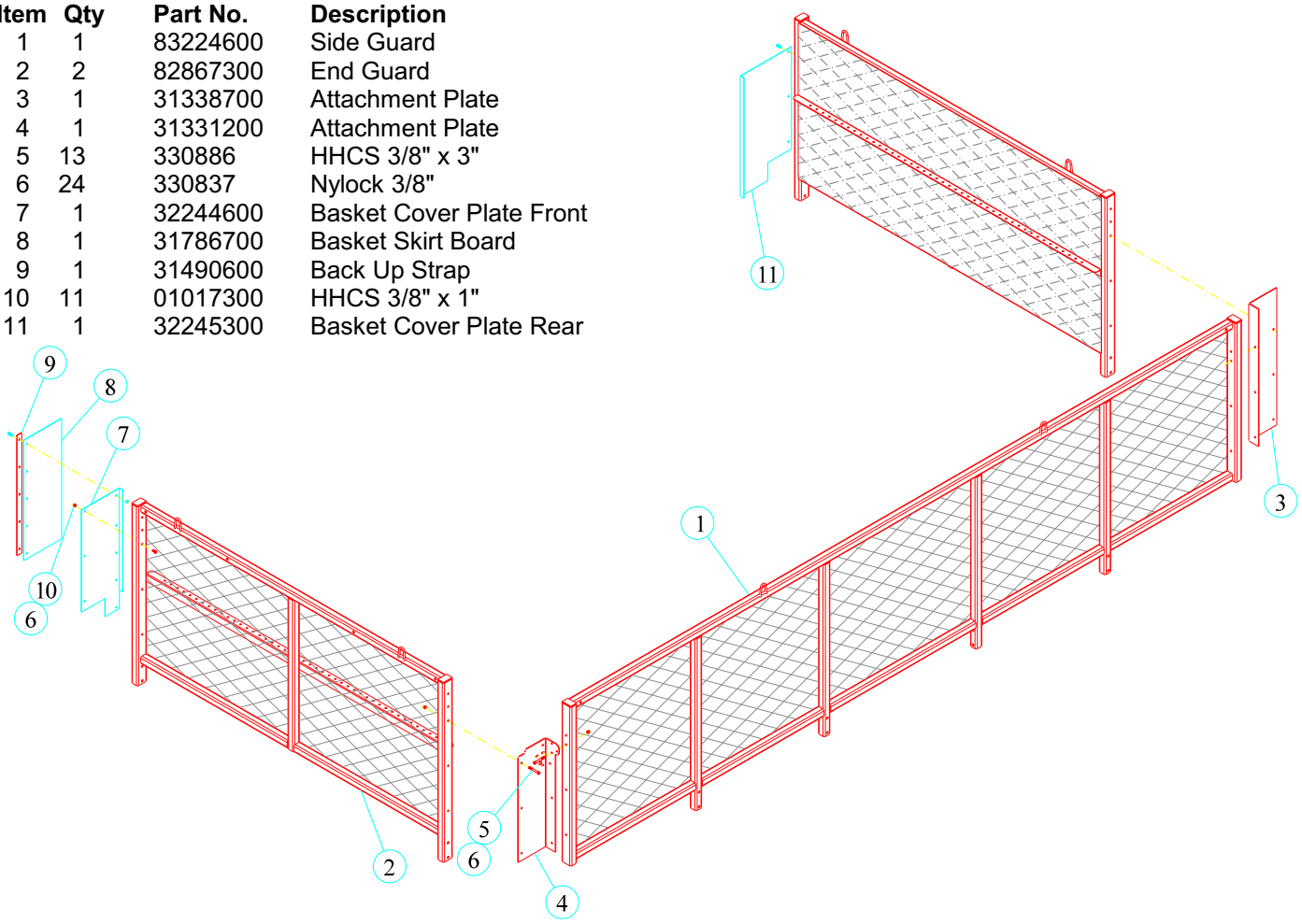

Hydraulics

#63236400 - Tank Assembly

Item	Qty	Part No.	Description
1	1	82991100	Tank
2	2	04225900	Pipe Street El 2½ NPTM-F
3	1	04226700	Pipe Nipple 2½ x Sch40 x12"
4	1	83041400	Filter Plate
5	1	00146100	Filler/Breather Assembly
6	1	00145300	Sight Level Gauge
7	1	04227500	Ball Valve 2½" NPTF
8	1	04216800	Adapter 2½" NPTM
9	1	461962	Pipe Plug 3/4 NPTM
10	4	335703	HHCS 3/8" x 1½"
11	12	01017300	HHCS 3/8" x 1"
12	1	31342900	Return Tube
13	1	04211900	Hydraulic Filter
14	1	04223400	Adapter Plug 1 7/8 MOR
15	1	04240800	Adapter Straight 1 7/8 MOR-1 5/8 FOR
16	1	00713800	Adapter 90° 1 5/8 MOR-1 5/8 JICM
17	10	330043	Lock Washer 3/8"
18	6	330894	Flat Washer 3/8"
19	1	00136200	Pipe Coupler 1½"
20	10	330837	Nylock 3/8"
21	4	335109	HHCS 3/8" x 7"
22	1	03735800	U-bolt 3/8" x 3 x 3 5/8
23	1	31337900	Pipe Nipple Bracket
24	1	04246500	Switch -Temperature Level
25	1	03412400	Strain Relief 1/4 - 5/16

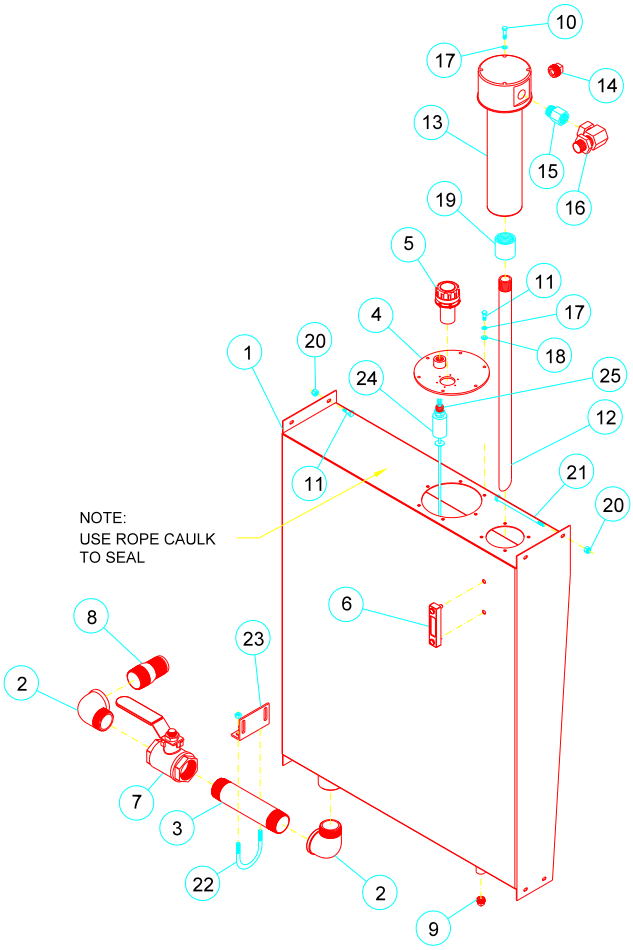

#63225700 - Regen Valve Assembly

Item	Qty	Part No.	Description
1	1	04239000	Regen Valve 60 gpm
2	4	04238200	Adapter Straight 1 5/8 MOR-1 5/16 FOR
3	1	00634600	Adapter 90° 1 5/16 MOR-1 5/16 JICM
4	1	00651000	Adapter 45° 1 5/16 MOR-1 5/16 JICM
5	1	00704700	Adapter Straight 1 5/16 MOR-1 5/16 JICM
6	1	63226500	Hose 1" x 127" 1 5/16 FJ Sw-Sleeved
7	1	63227300	Hose 1" x 138" 1 5/16 FJ Sw-Sleeved
8	2	337915	HHCS 3/8" x 8"
9	2	330837	Nylock 3/8"
10	1	04109500	Transducer
11	1	31500200	Adapter 90° -.250 NPT 1 5/16 MOR-1 5/16 JICM

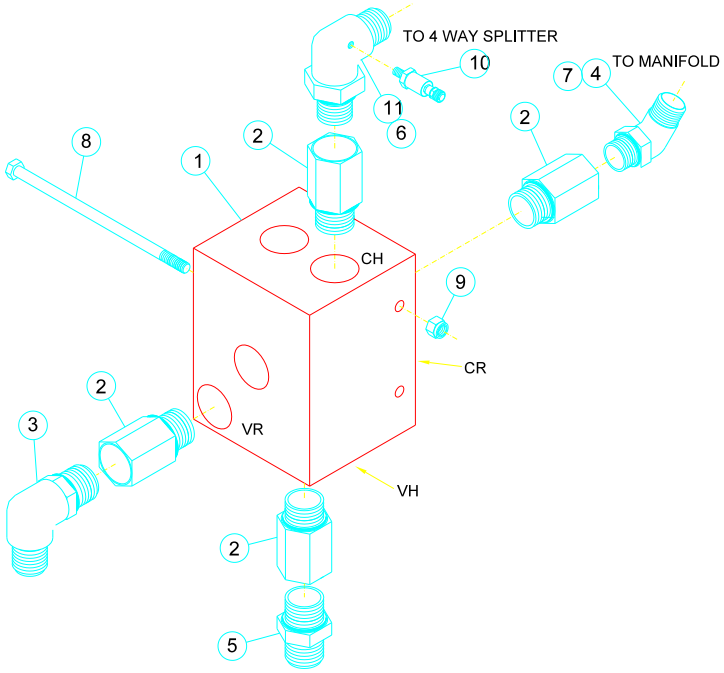

Hydraulics

#63216600 - 2-Spool Valve Assembly

Item	Qty	Part No.	Description
1	1	04199600	2-Spool Valve
	*	63331300	O-ring Kit for Valve Coil
2	1	03357100	Adapter Straight 7/16 MOR-9/16 JM
3			
4	1	00651000	Adapter 45° 1 5/16 MOR-1 5/16 JM
5	1	00705400	Adapter 90° 1 5/16 MOR-1 5/8 JM
6	2	00603100	Adapter 45° 1 1/16 MOR-1 5/16 JM
7	1	04237400	Adapter 90° 1 5/16 JM-1 5/16 JF Sw
8	2	00607200	Adapter 90° 1 1/16 MOR-1 1/16 JM
9	2	00562900	Adapter 90° 1 1/16 JF Sw-1 1/16 JM
10	1	03385200	Adapter Straight 9/16 FJ-1/4 F Pipe
11	1	00652800	Gauge 5000 PSI-1/4 M Pipe
12	1	63217400	Hose 1 1/4" x 69"-1 5/8 JF Sw
13	2	63218200	Hose 1" x 142"-1 5/16 JF Sw
14	2	475111	Hose 1" x 34"-1 1/16 JF Sw

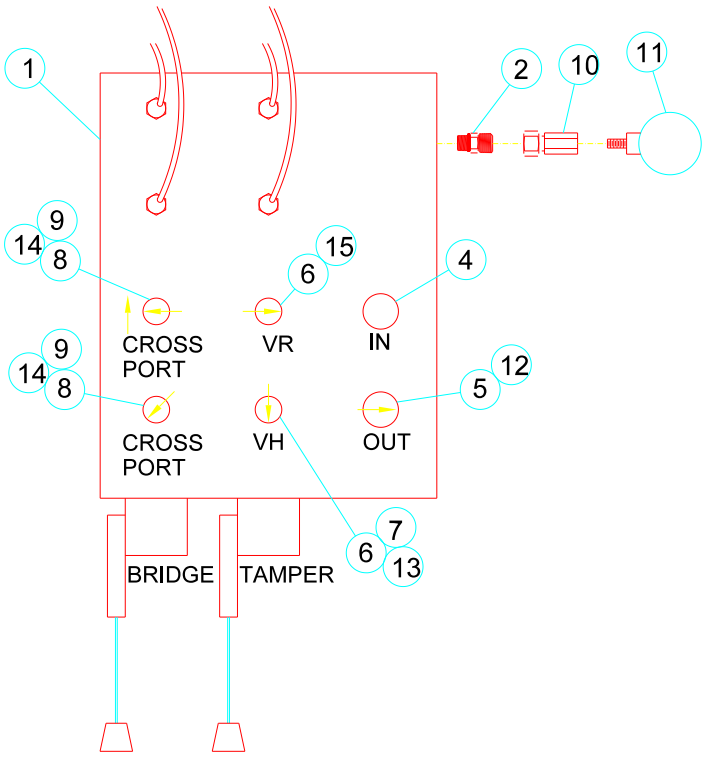

#63299200 - Hydraulic Cooler Assembly

Item	Qty	Part No.	Description
1	1	04313300	Cooler -D70
2	1	00715300	Adapter Straight 1 5/8 MOR-1 5/8 JM
3	1	04233300	Adapter 90° 1 5/8M-1 5/8M
4	1	63214100	Hose 1 1/4" x 9" -1 5/8 F Sw
5	1	00713800	Adapter 90° 1 5/8 MOR-1 5/8 JM
6	1	63215800	Hose 1 1/4" x 24½" 1 5/8 FSw
7	4	01158500	HHCS 3/8" x 1 1/4"
8	4	330894	Flat Washer 3/8"
9	4	330837	Nylock 3/8"

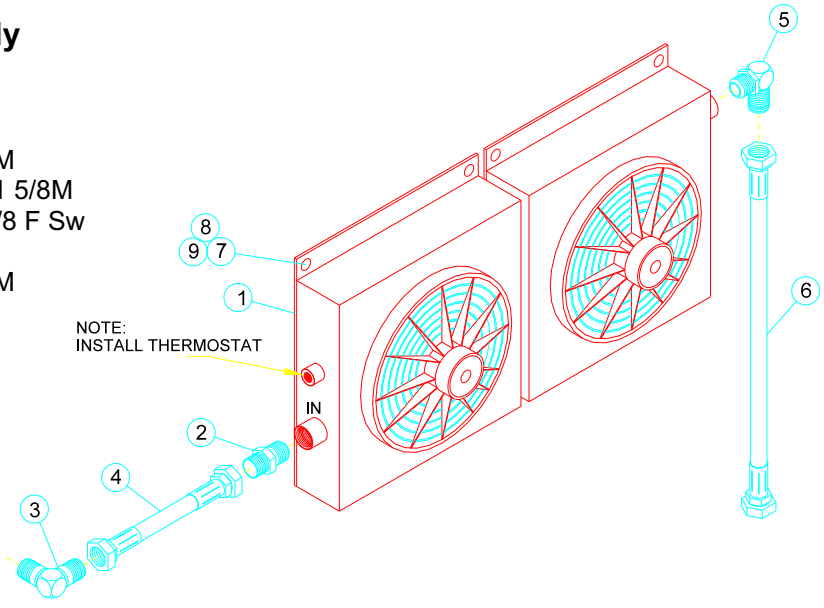

Hydraulics

#63223200 - Manifold Assembly

Item	Qty	Part No.	Description
1	1	04217600	Manifold 2-Section
2	1	04219200	Adapter Plug 1 5/16 MOR
3	2	04220000	Adapter Plug 1 1/16 MOR
4	1	00704700	Adapter Straight 1 5/16 MOR-1 5/16 JM
5	2	00605600	Adapter 90° 1 1/16 MOR-1 5/16 JM
6	2	02396000	HHCS 5/16" x 3 1/4"
7	2	331611	Nylock 5/16"

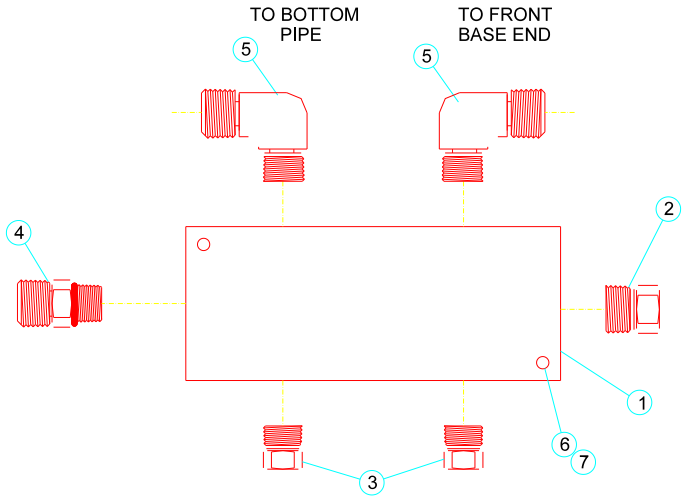

#63224000 - Solenoid Valve Assembly

Item	Qty	Part No.	Description
1	1	04130100	Solenoid Valve
2	5	00542100	Adapter 45° 7/8 MOR-7/8 JM
3	1	03362100	Adapter 90° 7/8 MOR-7/8 JM
4	2	473702	Hose ½" x 132" 3/4 MOR-7/8 JF Sw
5	2	465385	Male Coupler 3/4 FOR
6	2	252023	Hose Plate
7	2	335133	HHCS 1/4" x 1 3/4"
8	2	330522	Nylock 1/4"
9	4'	603001	Hose Wrap
10	2	02450500	HHCS 5/16" x 3"
11	2	331611	Nylock 5/16"

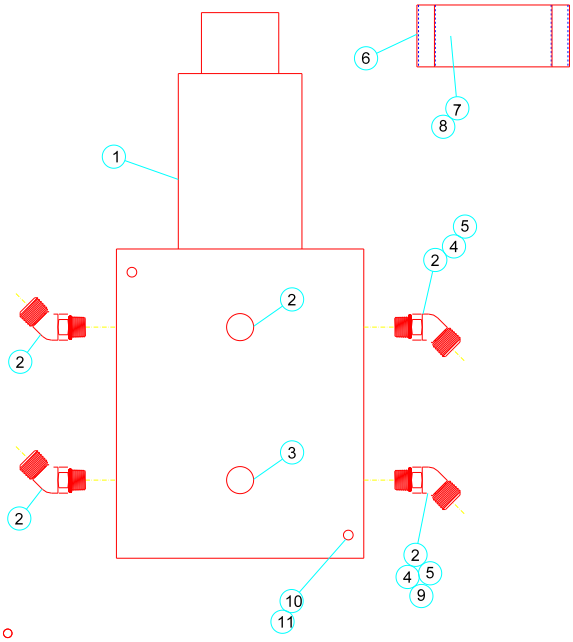

Hydraulics

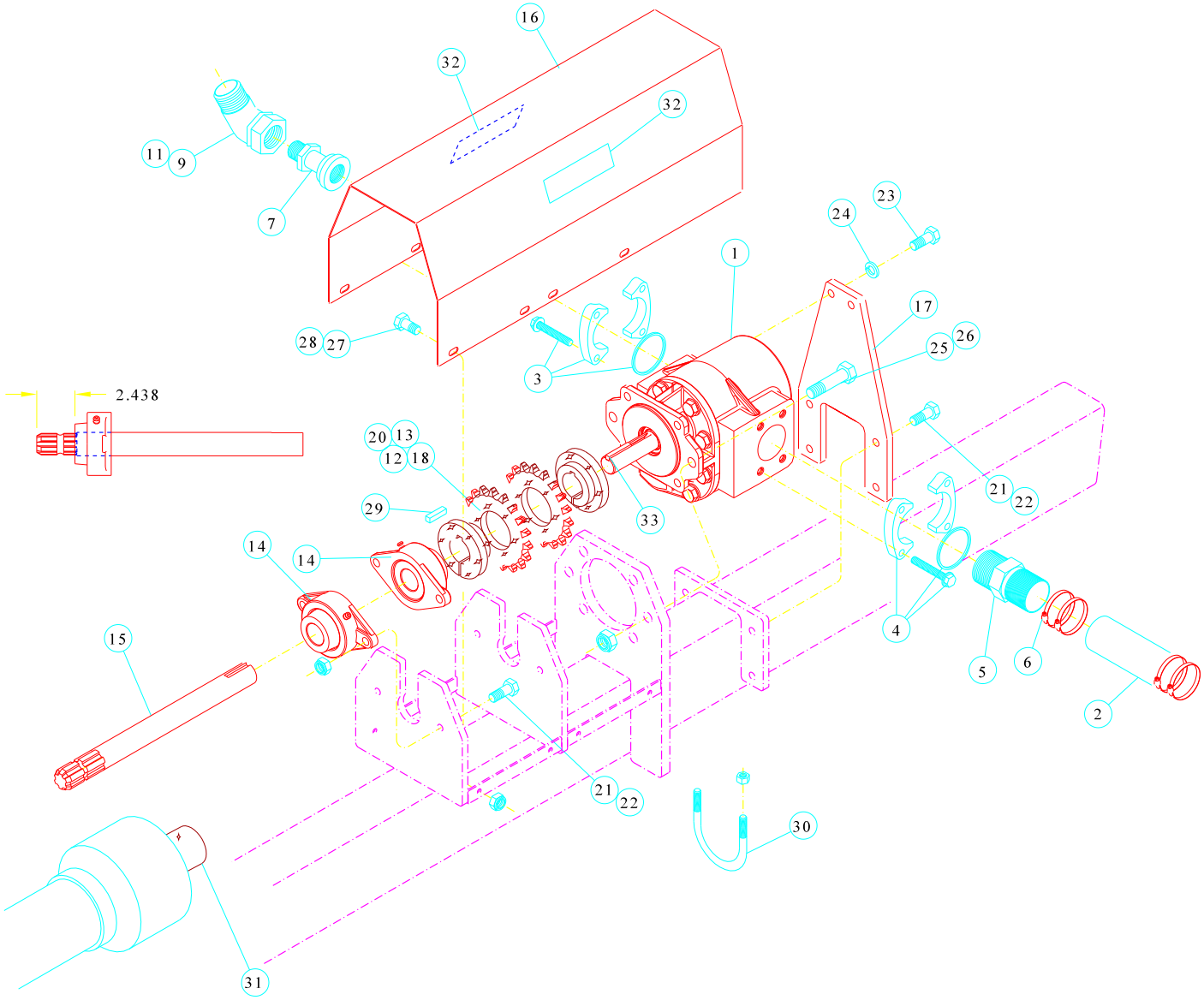

#63318000 - Pump Assembly

Item	Qty	Part No.	Description	Item	Qty	Part No.	Description
1	1	04321600	Pump Geartek E77L-1½"	16	1	31330400	PTO Guard
2	1	04234100	Hose 2½" x 55"	17	1	31333800	Pump Mount Plate
3	1	04214300	Adapter 1½ Split Flange Kit	18	2	00695700	Sprocket #80-20T SF
4	1	04215000	Adapter 2½ NPTF Flange Kit	19			
5	1	04216800	Adapter 2½ NPTM - 2½ Hose	20	2	00730200	Bushing 1½ SF
6	4	616045	Hose Clamp 70-78mm	21	12	331926	HHCS ½" x 2"
7	1	04235800	Adapter Straight 1 5/16" -1½ Flange	22	8	331363	Nylock ½"
8				23	2	01180900	HHCS ½" x 1 1/4"
9	1	472126	Adapter 45° 1 5/16 JM-1 5/16 JF Sw	24	2	330159	Lock Washer ½'
10				25	2	06957500	HHCS 5/8" x 2½"
11	1	62653100	Hose 1" x 78" -1 5/16 JF Sw	26	2	01572700	Nylock 5/8"
12	1	433912	Chain Connector #80 Double	27	8	01010800	HHCS 5/16" x 1"
13	1	31372600	Chain #80 Double x 19 Pitch	28	8	331611	Nylock 5/16"
14	2	03103900	Bearing 1½"	29	1	19183300	Key 3/8" x 1½"
15	1	31329600	Jack Shaft 1½" x 17"	30	1	03735800	U-bolt 3/8 x 3 x 3 5/8
				31	1	04236600	PTO
				32	2	05312400	Decal PTO Shield
				33	1	31485600	Key 5/16" x 1/4 x 2

Hydraulics

Cylinders

#475327 - 3½" x 30" Cylinder

Piston	473231
Rod Clevis	472977
Wiper	463240
Nut Tie Rod	464537
Nut Piston	461285
Clevis Pin	463133

#04222600 - 3" x 34" Cylinder

Back-Up	460980
Base Clevis	469718
Cap Screw	460477
Clevis Pin 2.75"	460451
Head	460899
Nut Clevis	460691
Nut Piston	460394
O-Ring	460923
Piston	460964
Rod Clevis	461483
Seal Kit	461087
Wiper	460907

#472613 - 5" x 43½" Cylinder

Back-up	461590
Lock Nut	461608
O-Ring	461533
Piston	472985
Seal Kit	472373

#475384 - 4" x 12" Cylinder

Piston	461269
Piston Nut	461285
O-Ring -Piston	461186
Back Up	461277
Wiper	460907
Tube	469700
Rod	468439
Head	470104
Seal Kit	463372

#475376 - 4" x 20" Hi-Cycle Cylinder
#475368 - 4" x 20" Hi-Cycle Cylinder with Sensor

Nut Piston	461608
Wiper	461160
Back-up	461277
O-Ring	461186
Nylon Plug	472894

#475343 - 3½" x 55" Hi-Cycle Cylinder

Nut Piston	461608
O-Ring	464446
Back-up	464487
Wiper	461160
Nylon Plug	472894

#475350 - 4½" x 55" Hi-Cycle Cylinder with Sensor

Nut Piston	461608
O-Ring	461186
Back-up	461277
Wiper	461160
Nylon Plug	472894

P.O. Box 526
Spearville, KS 67876

CrustBuster® SPEED KING INC.

620.227.7106
www.crustbuster.com